NOTE: - IF MULTIPLE LAYERS OF INSULATION, STAGGER JOINTS
- SEE TO STRUCTURAL FOR DECK ORIENTATION AND STRUCTURAL SUPPORT
- ALL STAINLESS STEEL FASTENERS INTO WOOD BLOCKING

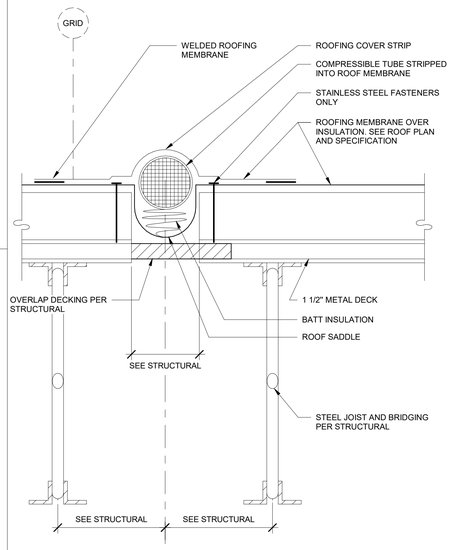

ROOF EXPANSION JOINT 17

A3.15 | REVISION DATE: 04.04.2019 | SCALE: 3" = 1'-0"

DESIGN BUILD MANAGER TO VERIFY DIMENSIONS

NOTE: - IF MULTIPLE LAYERS OF INSULATION, STAGGER JOINTS
- SEE TO STRUCTURAL FOR DECK ORIENTATION AND STRUCTURAL SUPPORT
- ALL STAINLESS STEEL FASTENERS INTO WOOD BLOCKING

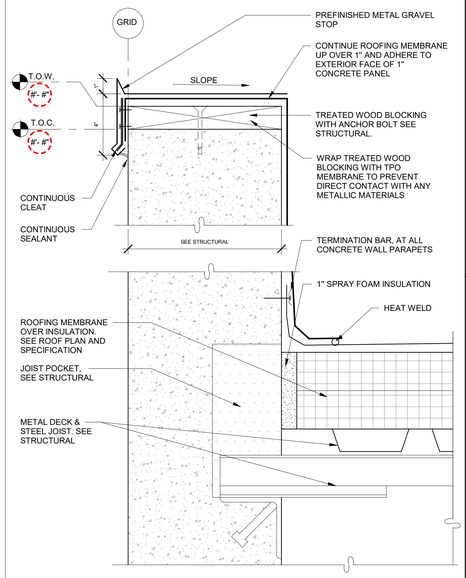

PARAPET GRAVEL STOP-TILT-UP PNL 12

A3.26 | REVISION DATE: 07.31.2019 | SCALE: 3" = 1'-0"

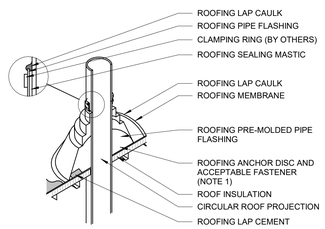

NOTES:
(1) DO NOT OVERLAP THE FLANGES FROM ADJACENT PIPE FLASHINGS.
(2) ANY SEAM UNDER BOOT FLANGE TO BE TREATED AS T-JOINT.

PIPE VENT 18

A3.19 | REVISION DATE: 11.12.2018 | SCALE: 6" = 1'-0"

DESIGN BUILD MANAGER TO VERIFY DIMENSIONS

NOTE: - IF MULTIPLE LAYERS OF INSULATION, STAGGER JOINTS
- SEE TO STRUCTURAL FOR DECK ORIENTATION AND STRUCTURAL SUPPORT
- ALL STAINLESS STEEL FASTENERS INTO WOOD BLOCKING

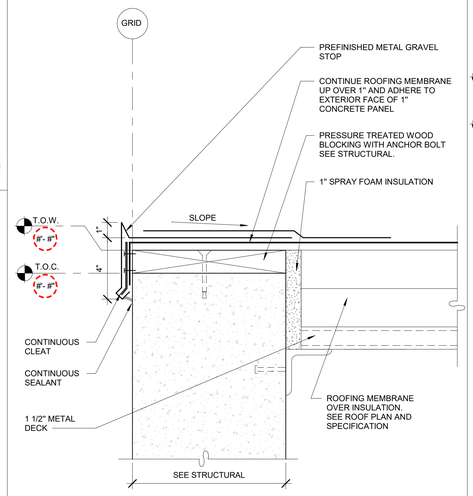

NON-PARAPET GRAVEL STOP 9

A3.12 | REVISION DATE: 04.04.2019 | SCALE: 3" = 1'-0"

DESIGN BUILD MANAGER TO VERIFY DIMENSIONS

NOTE: - IF MULTIPLE LAYERS OF INSULATION, STAGGER JOINTS
- SEE TO STRUCTURAL FOR DECK ORIENTATION AND STRUCTURAL SUPPORT
- ALL STAINLESS STEEL FASTENERS INTO WOOD BLOCKING

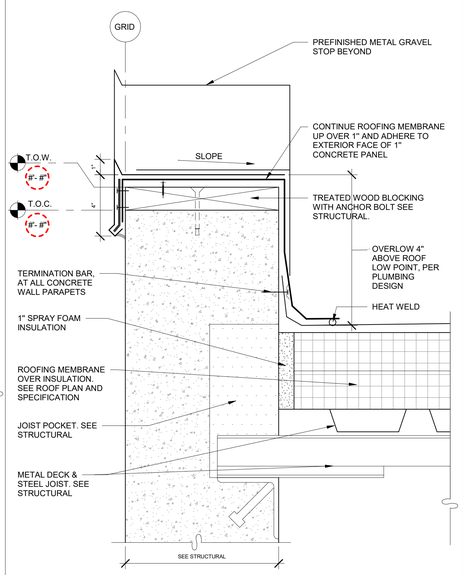

PARAPET OVERFLOW - TILT-UP PNL 14

A3.27 | REVISION DATE: 07.31.2019 | SCALE: 3" = 1'-0"

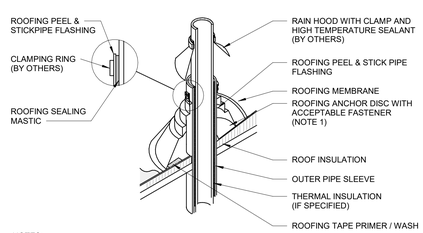

NOTES:

1. WITH MECHANICALLY FASTENED SPEC, MEMBRANE MUST BE MECHANICALLY ATTACHED WITH ROOFING ANCHOR DISC WITH ACCEPTABLE FASTENERS (6" [150 mm] CENTERS AROUND PROJECTION)
2. DO NOT OVERLAP THE FLANGES FROM ADJACENT PIPE FLASHINGS.
3. 15 YEAR AND 20 YEAR GUARANTEES REQUIRE DOUBLE WRAP.

HOT PIPE FLASHING 19

A3.20 | REVISION DATE: 11.12.2018 | SCALE: 6" = 1'-0"

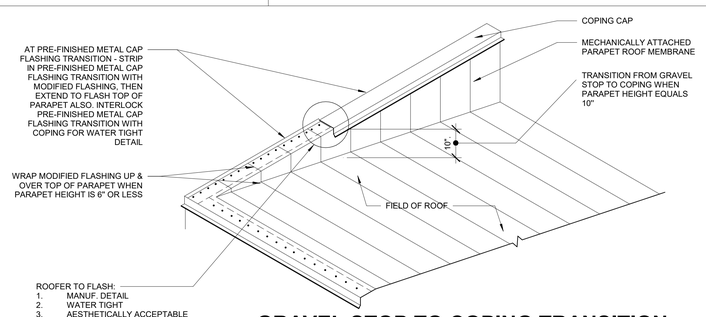

GRAVEL STOP TO COPING TRANSITION 15

A3.18 | REVISION DATE: 11.12.2018 | SCALE: 3/4" = 1'-0"

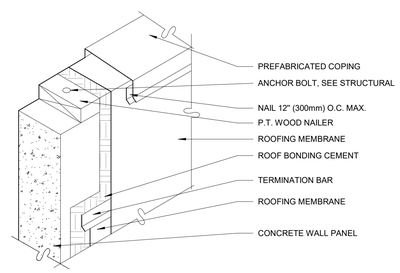

COPING ISOMETRIC 10

A3.14 | REVISION DATE: 04.04.2019 | SCALE: 12" = 1'-0"

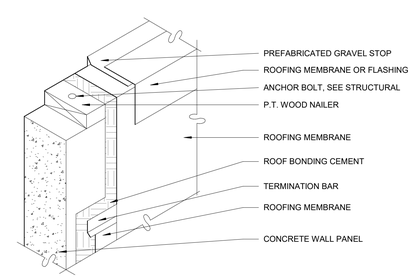

GRAVEL STOP ISOMETRIC 5

A3.13 | REVISION DATE: 04.04.2019 | SCALE: 12" = 1'-0"

DESIGNER / BUILDER

ARCO DESIGN/BUILD INDUSTRIAL

44 SOUTH BROADWAY, SUITE 1003
WHITE PLAINS, NY 10601
P: 914.821.5535 F: 914.306.6010

ADBI | DESIGN SERVICES

Lincoln Equities Group, LLC

PROJECT TITLE

LINCOLN LOGISTICS BREWSTER - BLDG B

NY-312 & PUGSLEY RD, SOUTHEAST, NY 10509

ARCHITECT
ADBI / DESIGN SERVICES LLC
44 SOUTH BROADWAY, SUITE 1003
WHITE PLAINS, NY 10601

CIVIL ENGINEER
LANGAN ENGINEERING
300 KIMBALL DRIVE
PARSIPPANY, NJ 07054

STRUCTURAL ENGINEER
SMITH/ ROBERTS AND ASSOCIATES, INC.
6501 BLUFF RD.
INDIANAPOLIS, INDIANA 46217

MECHANICAL ENGINEER
NATIONAL DESIGN/ BUILD SERVICES
11840 BORMAN DRIVE
ST. LOUIS, MO 63146

ELECTRICAL ENGINEER
FBX ENGINEERING
5 CHRISTY DRIVE, SUITE 307
CHADDS FORD, PA 19317

PLUMBING ENGINEER
MCCARTHY ENGINEERING ASSOCIATES, INC.
315 EAST SECOND STREET
BOYERTOWN, PA 19512

FIRE PROTECTION ENGINEER
S A COMUNALE CO. INC.
2900 NEWPARK DRIVE
BARBERTON, OH 44203

SEAL

JOSEPH V. DIGIORGIO | NY: 042948

SUBMITTALS

NO.	DATE	DESCRIPTION
	05.27.2022	PROGRESS SET

PROJECT NO. AS286-21/ NY131

DRAWN BY ARCO

SHEET TITLE

ROOF DETAILS

SHEET NO.

A-8.31

PRINTED ON ARCH E1 30" x 42" 5/23/2022 11:01:10 PM